LINE LEGEND	
	DRY AIR IN
	NITROGEN
	CONDENSATE DRAIN

GA-N2GEN-FLEX, N2GEN-FLEX PACKAGE GENERAL ARRANGEMENT, 01			
ITEM #	NUMBER	DESCRIPTION	QTY.
1	300122	OIL WATER SEPARATOR	1
2	301425	AIR COMPRESSOR WITH REFRIG DRYER	1
3	N2GEN-FLEX-8TS	N2GEN-FLEX-8TS UNIT ASSEMBLY	1

DIMENSIONS AND WEIGHTS	
DIMENSIONS	WEIGHT
AIR COMPRESSOR	
(XXX"L X XXX"W X XXX"H)	(XXXX lbs)
NITROGEN GENERATOR	
(30"L X 68"W X 70"H)	(XXXX lbs)
OIL WATER SEPARATOR	
(XXX"L X XXX"W X XXX"H)	(XXXX lbs)
NITROGEN TANK	
(21"OD X 53.5"H)	(165 lbs)

CONNECTIONS	
1	X/X" NPT FEMALE
2	3/4" NPT FEMALE
3	1/4" OD PTC
4	X MM TUBE
5	X/X" NPT FEMALE
6	1/2" NPT FEMALE
7	3/4" OD BARB

NITROGEN GENERATOR DESIGN DATA	
AIR FLOW	XXXX SCFM @ XXX PSI
N2 OUT FLOW	XXXX SCFH @ XXX PSI
PURITY	XX.XXX%

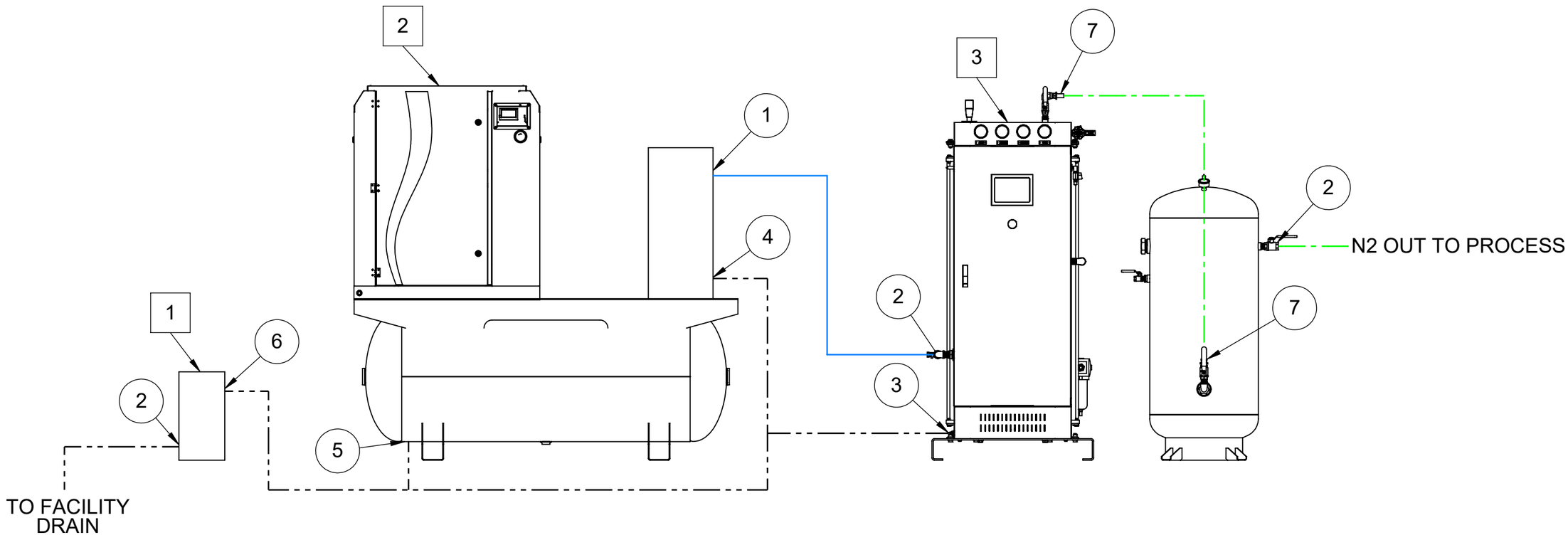

REV.	ECO#	DESCRIPTION	DATE	REV'D BY	APPD. BY
-	-		-	-	-
02	-	UPDATED GENERATOR TO HAVE 2ND TANK INCLUDED WITH BARB CONNECTION CALLED OUT	06/08/26	BS	DD
01	-	NEW N2 TANK FITTINGS PACKAGE FOR 10-14 UNITS	08/05/25	BS	MFG

REVISIONS: ONLY THE LAST 3 REVISIONS WILL BE SHOWN. OLDER REVISIONS CONSOLIDATED AND FILED

MISSION CRITICAL South-Tek Systems

PROPRIETARY AND CONFIDENTIAL
THE INFORMATION CONTAINED IN THIS DRAWING IS THE SOLE PROPERTY OF SOUTH-TEK SYSTEMS. ANY REPRODUCTION IN PART OR AS A WHOLE WITHOUT THE WRITTEN PERMISSION OF SOUTH-TEK SYSTEMS IS PROHIBITED.

MATERIAL:

FINISH:

WEIGHT: -

PROJECT NAME: CUSTOMER DRAWINGS

UNLESS OTHERWISE SPECIFIED DIMENSIONS ARE IN INCHES

ANGLES	X.	.X	.XX	.XXX	X/X<10'	X/X>10'
±.5°	±1	±.2	±.03	±.005	±1/16	±1/8

N2GEN-FLEX PACKAGE GENERAL ARRANGEMENT

FM APPROVAL APPLIES: NO

SIZE: B

NUMBER: GA-N2GEN-FLEX

DRAWN: MFG — DATE: 02/05/24

APPROVED: SRG — DATE: 06/11/26

SCALE: 1:20

SHEET: 1 OF 8

REVISION: 01

LINE LEGEND	
	DRY AIR IN
	NITROGEN
	CONDENSATE DRAIN

GA-N2GEN-FLEX, N2GEN-FLEX PACKAGE GENERAL ARRANGEMENT, 01			
ITEM #	NUMBER	DESCRIPTION	QTY.
E1	300122	OIL WATER SEPARATOR	1
E2	301425	AIR COMPRESSOR WITH REFRIGERANT DRYER	1
E3	N2GEN-FLEX-14S	N2GEN-FLEX-14S UNIT ASSEMBLY	1

DIMENSIONS AND WEIGHTS	
DIMENSIONS	WEIGHT
AIR COMPRESSOR	
(XXX"L X XXX"W X XXX"H)	(XXXX LBS)
NITROGEN GENERATOR	
(30"L X 68"W X 70"H)	(XXXX LBS)
NITROGEN TANK	
(24" OD X 77.5"H)	(350 LBS)
OIL WATER SEPARATOR	
(XXX"L X XXX"W X XXX"H)	(XXXX LBS)

CONNECTIONS	
1	X/X" NPT FEMALE
2	3/4" NPT FEMALE
3	1/4" OD PTC
4	3/4" OD BARB
5	X/X" NPT FEMALE
6	X MM OD TUBE
7	X/X" NPT FEMALE
8	1/2" NPT FEMALE

NITROGEN GENERATOR DESIGN DATA	
AIR FLOW	XXXX SCFM @ XXX PSI
N2 OUT FLOW	XXXX SCFH @ XXX PSI
PURITY	XX.XXX%

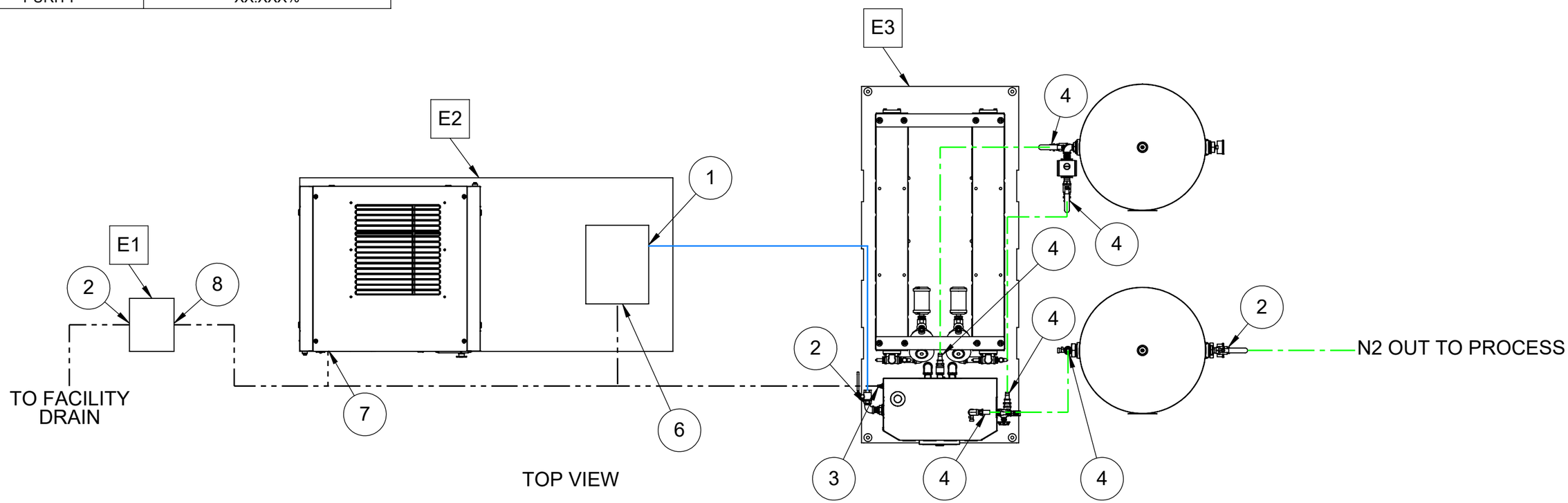

REV.	ECO#	DESCRIPTION	DATE	REV'D BY	APPD. BY
-	-		-	-	-
02	-	UPDATED GENERATOR TO HAVE 2ND TANK INCLUDED WITH BARB CONNECTION CALLED OUT	06/08/26	BS	DD
01	-	NEW N2 TANK FITTINGS PACKAGE FOR 10-14 UNITS	08/05/25	BS	MFG

REVISIONS: ONLY THE LAST 3 REVISIONS WILL BE SHOWN. OLDER REVISIONS CONSOLIDATED AND FILED

MISSION CRITICAL South-Tek Systems

PROPRIETARY AND CONFIDENTIAL
THE INFORMATION CONTAINED IN THIS DRAWING IS THE SOLE PROPERTY OF SOUTH-TEK SYSTEMS. ANY REPRODUCTION IN PART OR AS A WHOLE WITHOUT THE WRITTEN PERMISSION OF SOUTH-TEK SYSTEMS IS PROHIBITED.

MATERIAL:

FINISH:

WEIGHT: -

PROJECT NAME: CUSTOMER DRAWINGS

UNLESS OTHERWISE SPECIFIED DIMENSIONS ARE IN INCHES

ANGLES	X.	.X	.XX	.XXX	X/X<10'	X/X>10'
±.5°	±1	±.2	±.03	±.005	±1/16	±1/8

N2GEN-FLEX PACKAGE GENERAL ARRANGEMENT

FM APPROVAL APPLIES: NO

SIZE: B

NUMBER: GA-N2GEN-FLEX

DRAWN:	APPROVED:
MFG	SRG
DATE: 02/05/24	DATE: 06/11/26
SCALE: 1:20	SHEET: 2 OF 8
REVISION: 01	

LINE LEGEND	
	WET AIR
	DRY AIR IN
	NITROGEN
	CONDENSATE DRAIN

GA-N2GEN-FLEX, N2GEN-FLEX PACKAGE GENERAL ARRANGEMENT, 01

ITEM #	NUMBER	DESCRIPTION	QTY.
E1	108280	00120 GALLON, 200 PSI STORAGE TANK	1
E2	300122	OIL WATER SEPARATOR	1
E3	300279	ZERO LOSS DRAIN, 294 GAL DRY, 147 GAL WET	1
E4	300345	AIR COMPRESSOR	1
E5	301012	DRYER, REF	1
E6	301164	FLTR, 0.750NPT, 85CFM, 1MIC, SF	1
E7	301182	FLTR, 0.750NPT, 85CFM, .01MIC, SF	1
E8	A01-625-06-06-A-GLV	00120 GALLON, 200 PSI AIR RECIEVER FITTINGS	1
E9	N2GEN-FLEX-8TS	N2GEN-FLEX-8TS UNIT ASSEMBLY	1

DIMENSIONS AND WEIGHTS	
DIMENSIONS	WEIGHT
AIR COMPRESSOR	
(XXX"L X XXX"W X XXX"H)	(XXXX lbs)
DRYER	
(XXX"L X XXX"W X XXX"H)	(XXXX lbs)
AIR TANK	
(XXX"OD X XXX"H)	(XXXX lbs)
NITROGEN GENERATOR	
(30"L X 68"W X 70"H)	(XXXX lbs)
OIL WATER SEPARATOR	
(XXX"L X XXX"W X XXX"H)	(XXXX lbs)
NITROGEN TANK	
(21"OD X 53.5"H)	(165 lbs)

CONNECTIONS	
1	X/X" NPT FEMALE
2	X/X" NPT FEMALE
3	X/X" NPT FEMALE
4	X/X" NPT FEMALE
5	3/4" NPT FEMALE
6	1/4" OD PTC
7	1/4" NPT FEMALE
8	1/8" NPT FEMALE
9	X MM OD TUBE
10	1/2" NPT FEMALE
11	3/4" OD BARB

NITROGEN GENERATOR DESIGN DATA	
AIR FLOW	XXXX SCFM @ XXX PSI
N2 OUT FLOW	XXXX SCFH @ XXX PSI
PURITY	XX.XXX%

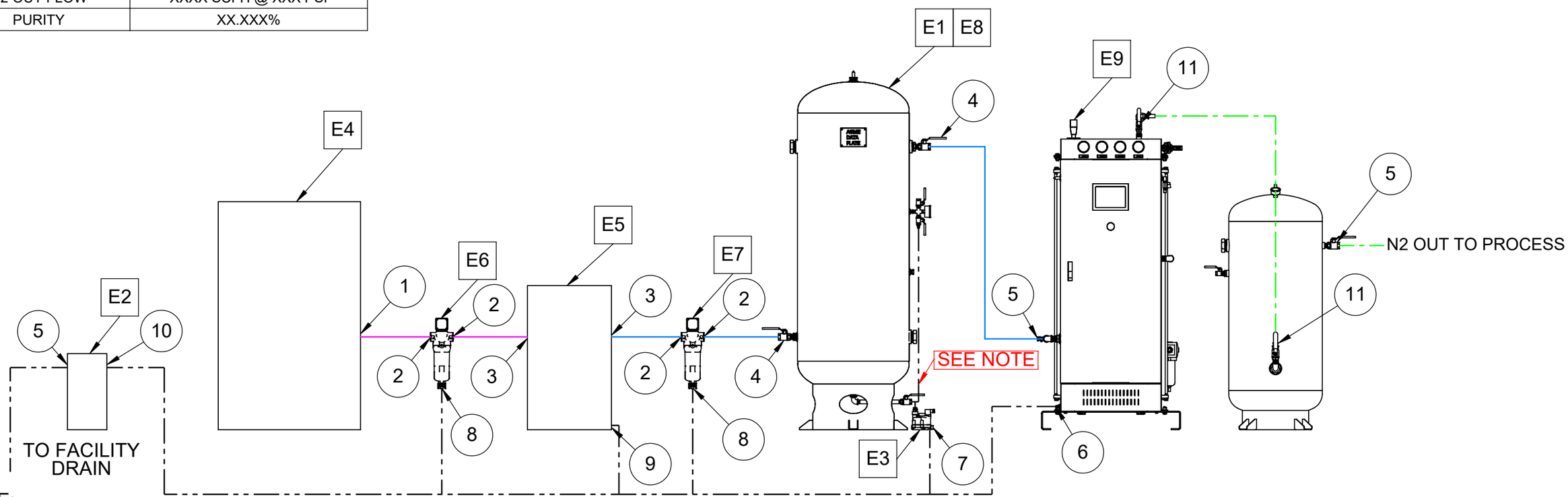

NOTE:
IF DRAIN TO ITEM E3 IS NOT CONSTANT DOWNHILL SLOPE, VENT LINE MUST BE INSTALLED.

REV.	ECO#	DESCRIPTION	DATE	REV'D BY	APPD. BY
-	-		-	-	-
02	-	UPDATED GENERATOR TO HAVE 2ND TANK INCLUDED WITH BARB CONNECTION CALLED OUT	06/08/26	BS	DD
01	-	NEW N2 TANK FITTINGS PACKAGE FOR 10-14 UNITS	08/05/25	BS	MFG

REVISIONS: ONLY THE LAST 3 REVISIONS WILL BE SHOWN. OLDER REVISIONS CONSOLIDATED AND FILED

MISSION CRITICAL South-Tek Systems

PROPRIETARY AND CONFIDENTIAL
THE INFORMATION CONTAINED IN THIS DRAWING IS THE SOLE PROPERTY OF SOUTH-TEK SYSTEMS. ANY REPRODUCTION IN PART OR AS A WHOLE WITHOUT THE WRITTEN PERMISSION OF SOUTH-TEK SYSTEMS IS PROHIBITED.

MATERIAL:
FINISH:
WEIGHT:

N2GEN-FLEX PACKAGE GENERAL ARRANGEMENT

PROJECT NAME: CUSTOMER DRAWINGS
FM APPROVAL APPLIES: NO
SIZE: B

DRAWN: MFG — DATE: 02/05/24
APPROVED: SRG — DATE: 06/11/26
SCALE: 1:24
SHEET: 3 OF 8

UNLESS OTHERWISE SPECIFIED DIMENSIONS ARE IN INCHES

ANGLES	X.	.X	.XX	.XXX	X/X<10'	X/X>10'
±.5°	±1	±.2	±.03	±.005	±1/16	±1/8

NUMBER: GA-N2GEN-FLEX
REVISION: 01

LINE LEGEND	
	WET AIR
	DRY AIR IN
	NITROGEN
	CONDENSATE DRAIN

GA-N2GEN-FLEX, N2GEN-FLEX PACKAGE GENERAL ARRANGEMENT, 01

ITEM #	NUMBER	DESCRIPTION	QTY.
E1	N2GEN-FLEX-14S	N2GEN-FLEX-14S UNIT ASSEMBLY	1
E2	300345	AIR COMPRESSOR	1
E3	301012	DRYER, REF	1
E4	A01-625-06-06-A-GLV	00120 GALLON, 200 PSI AIR RECIEVER FITTINGS	1
E5	108280	00120 GALLON, 200 PSI STORAGE TANK	1
E6	301164	FLTR, 0.750NPT, 85CFM, 1MIC, SF	1
E7	301164	FLTR, 0.750NPT, 85CFM, 1MIC, SF	1
E8	300122	OIL WATER SEPARATOR	1
E9	300279	ZERO LOSS DRAIN	1

DIMENSIONS AND WEIGHTS	
DIMENSIONS	WEIGHT
AIR COMPRESSOR	
(XXX"L X XXX"W X XXX"H)	(XXX LBS)
DRYER	
(XX"L X XX"W X XX"H)	(XXX LBS)
AIR TANK	
(XXX"OD X XXX"H)	(XXX LBS)
NITROGEN GENERATOR	
(30"L X 68"W X 70"H)	(XXX LBS)
NITROGEN TANK	
(24" OD X 77.5"H)	(350 LBS)
OIL WATER SEPARATOR	
(XX"L X XX"W X XX"H)	(XXX LBS)

CONNECTIONS	
1	X/X" NPT FEMALE
2	X/X" NPT FEMALE
3	X/X" NPT FEMALE
4	X/X" NPT FEMALE
5	3/4" NPT FEMALE
6	3/4" OD BARB
7	X/X" NPT FEMALE
8	1/4" OD PTC
9	1/4" NPT FEMALE
10	1/8" NPT FEMALE
11	X MM OD TUBE
12	X/X" NPT FEMALE
13	1/2" NPT FEMALE

NITROGEN GENERATOR DESIGN DATA	
AIR FLOW	XXXX SCFM @ XXX PSI
N2 OUT FLOW	XXXX SCFH @ XXX PSI
PURITY	XX.XXX%

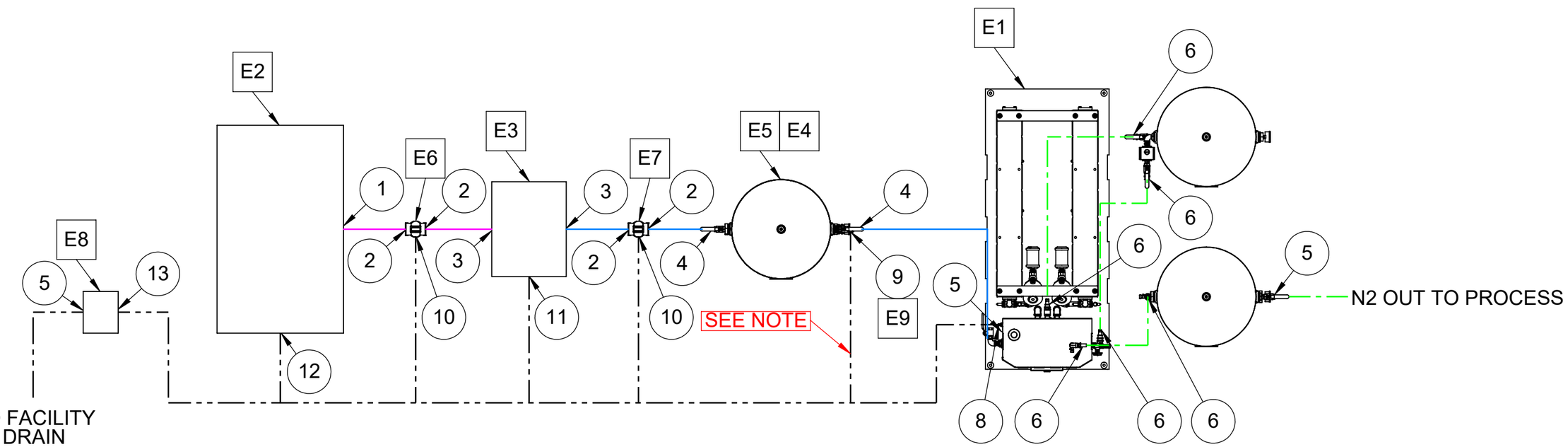

NOTE:
IF DRAIN TO ITEM E9 IS NOT CONSTANT DOWNHILL SLOPE, VENT LINE MUST BE INSTALLED.

REV.	ECO#	DESCRIPTION	DATE	REV'D BY	APPD. BY
-	-		-	-	-
02	-	UPDATED GENERATOR TO HAVE 2ND TANK INCLUDED WITH BARB CONNECTION CALLED OUT	06/08/26	BS	DD
01	-	NEW N2 TANK FITTINGS PACKAGE FOR 10-14 UNITS	08/05/25	BS	MFG

REVISIONS: ONLY THE LAST 3 REVISIONS WILL BE SHOWN. OLDER REVISIONS CONSOLIDATED AND FILED

MISSION CRITICAL South-Tek Systems

PROPRIETARY AND CONFIDENTIAL
THE INFORMATION CONTAINED IN THIS DRAWING IS THE SOLE PROPERTY OF SOUTH-TEK SYSTEMS. ANY REPRODUCTION IN PART OR AS A WHOLE WITHOUT THE WRITTEN PERMISSION OF SOUTH-TEK SYSTEMS IS PROHIBITED.

MATERIAL:
FINISH:
WEIGHT: -
PROJECT NAME: CUSTOMER DRAWINGS

N2GEN-FLEX PACKAGE GENERAL ARRANGEMENT

DRAWN: MFG | DATE: 02/05/24
APPROVED: SRG | DATE: 06/11/26
FM APPROVAL APPLIES: NO
SIZE: B
SCALE: 1:26
SHEET: 4 OF 8

UNLESS OTHERWISE SPECIFIED DIMENSIONS ARE IN INCHES

ANGLES	X.	.X	.XX	.XXX	X/X<10'	X/X>10'
±.5°	±1	±.2	±.03	±.005	±1/16	±1/8

NUMBER: GA-N2GEN-FLEX
REVISION: 01

LINE LEGEND	
	WET AIR
	DRY AIR IN
	NITROGEN
	CONDENSATE DRAIN

GA-N2GEN-FLEX, N2GEN-FLEX PACKAGE GENERAL ARRANGEMENT, 01

ITEM #	NUMBER	DESCRIPTION	QTY.
E2	108280	00120 GALLON, 200 PSI STORAGE TANK	2
E3	111775	DRYER, DESICCANT	1
E4	300007	WATER SEPARATOR FILTER	1
E5	300122	OIL WATER SEPARATOR	1
E6	300279	ZERO LOSS DRAIN, 294 GAL DRY, 147 GAL WET	1
E7	300345	AIR COMPRESSOR	1
E8	301182	FILTER, 85CFM, .01MIC	1
E10	A01-625-06-06-A-GLV	00120 GALLON, 200 PSI AIR RECIEVER FITTINGS	2
E11	N2GEN-FLEX-8TS	N2GEN-FLEX-8TS UNIT ASSEMBLY	1

DIMENSIONS AND WEIGHTS	
DIMENSIONS	WEIGHT
AIR COMPRESSOR	
(XXX"L X XXX"W X XXX"H)	(XXXX LBS)
AIR TANK	
(XXX"OD XXX"H)	(XXXX LBS)
DRYER	
(XXX"L X XXX"W X XXX"H)	(XXXX LBS)
NITROGEN GENERATOR	
(30"L X 68"W X 70"H)	(XXXX LBS)
OIL WATER SEPARATOR	
(XXX"L X XXX"W X XXX"H)	(XXXX LBS)
NITROGEN TANK	
(21"OD X 53.5"H)	(165 lbs)

CONNECTIONS	
1	X/X" NPT FEMALE
2	X/X" NPT FEMALE
3	X/X" NPT FEMALE
4	X/X" NPT FEMALE
5	3/4" NPT FEMALE
6	1/4" OD PTC
7	X/X" NPT FEMALE
8	1/8" NPT FEMALE
9	X/X" NPT FEMALE
10	X/X" NPT FEMALE
11	1/2" NPT FEMALE
12	3/4" OD BARB

NITROGEN GENERATOR DESIGN DATA	
AIR FLOW	XXXX SCFM @ XXX PSI
N2 OUT FLOW	XXXX SCFH @ XXX PSI
PURITY	XX.XXX%

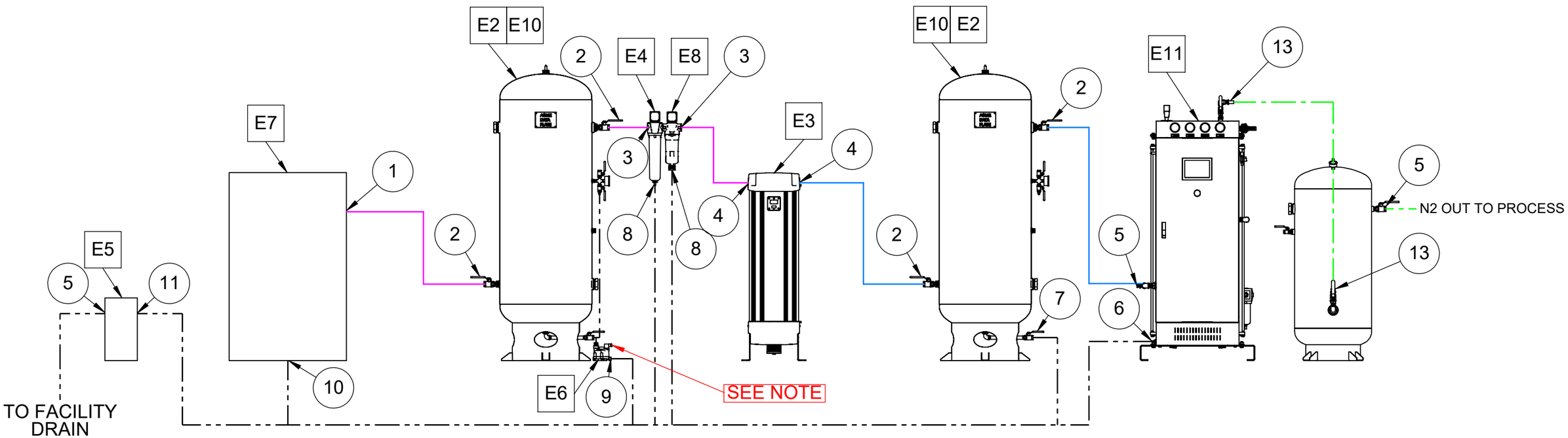

NOTE:
IF DRAIN TO ITEM E6 IS NOT CONSTANT DOWNHILL SLOPE, VENT LINE MUST BE INSTALLED.

REV.	ECO#	DESCRIPTION	DATE	REV'D BY	APPD. BY
-	-		-	-	-
02	-	UPDATED GENERATOR TO HAVE 2ND TANK INCLUDED WITH BARB CONNECTION CALLED OUT	06/08/26	BS	DD
01	-	NEW N2 TANK FITTINGS PACKAGE FOR 10-14 UNITS	08/05/25	BS	MFG

REVISIONS: ONLY THE LAST 3 REVISIONS WILL BE SHOWN. OLDER REVISIONS CONSOLIDATED AND FILED

MISSION CRITICAL South-Tek Systems

PROPRIETARY AND CONFIDENTIAL
THE INFORMATION CONTAINED IN THIS DRAWING IS THE SOLE PROPERTY OF SOUTH-TEK SYSTEMS. ANY REPRODUCTION IN PART OR AS A WHOLE WITHOUT THE WRITTEN PERMISSION OF SOUTH-TEK SYSTEMS IS PROHIBITED.

MATERIAL:
FINISH:
WEIGHT: -
PROJECT NAME: CUSTOMER DRAWINGS

N2GEN-FLEX PACKAGE GENERAL ARRANGEMENT

DRAWN: MFG — DATE: 02/05/24
APPROVED: SRG — DATE: 06/11/26
FM APPROVAL APPLIES: NO
SIZE: B
SCALE: 1:26
SHEET: 5 OF 8

UNLESS OTHERWISE SPECIFIED DIMENSIONS ARE IN INCHES

ANGLES	X.	.X	.XX	.XXX	X/X<10'	X/X>10'
±.5°	±1	±.2	±.03	±.005	±1/16	±1/8

NUMBER: GA-N2GEN-FLEX
REVISION: 01

LINE LEGEND	
	WET AIR
	DRY AIR IN
	NITROGEN
	CONDENSATE DRAIN

GA-N2GEN-FLEX, N2GEN-FLEX PACKAGE GENERAL ARRANGEMENT, 01

ITEM #	NUMBER	DESCRIPTION	QTY.
E1	105057	00120 GALLON, 200 PSI STORAGE TANK	1
E2	108280	00120 GALLON, 200 PSI STORAGE TANK	1
E3	111775	DRYER, DSC, 115/1/60, 106CFM, -40F, 1NPT IN	1
E4	300007	01.000 NPT NANO WATER SEPARATOR FILTER	1
E5	300122	OWS, 120CFM, (4) 0.5 PTC INLET, 0.75 BARB OUTLET	1
E6	300279	ZERO LOSS DRAIN, 294 GAL DRY, 147 GAL WET	1
E7	300345	AIR COMPRESSOR, 20 HP	1
E8	301182	FLTR, 0.750NPT, 85CFM, .01MIC, SF	1
E9	A01-625-06-06-A-GLV	00120 GALLON, 200 PSI AIR RECIEVER FITTINGS	2
E10	N2GEN-FLEX-14S	N2GEN-FLEX-14S UNIT ASSEMBLY	1

DIMENSIONS AND WEIGHTS	
DIMENSIONS	WEIGHT
AIR COPMRESSOR	
(XXX"L X XXX"W X XXX"H)	(XXXX LBS)
AIR TANK	
(XXX"OD X XXX"H)	(XXXX LBS)
DRYER	
(XXX"L X XXX"W X XXX"H)	(XXXX LBS)
NITROGEN GENERATOR	
(30"L X 68"W X 70"H)	(XXXX LBS)
NITROGEN TANK	
(24" OD X 77.5"H)	(77.5 LBS)
OIL WATER SEPARATOR	
(XXX"L X XXX"W X XXX"H)	(XXXX LBS)

CONNECTIONS	
1	X/X" NPT FEMALE
2	X/X" NPT FEMALE
3	X/X" NPT FEMALE
4	X/X" NPT FEMALE
5	3/4" NPT FEMALE
6	X/X" NPT FEMALE
7	X/X" NPT FEMALE
8	1/8" NPT FEMALE
9	X/X" NPT FEMALE
10	X/X" NPT FEMALE
11	1/2" NPT FEMALE
12	3/4" OD BARB

NITROGEN GENERATOR DESIGN DATA	
AIR FLOW	XXXX SCFM @ XXX PSI
N2 OUT FLOW	XXXX SCFH @ XXX PSI
PURITY	XX.XXX%

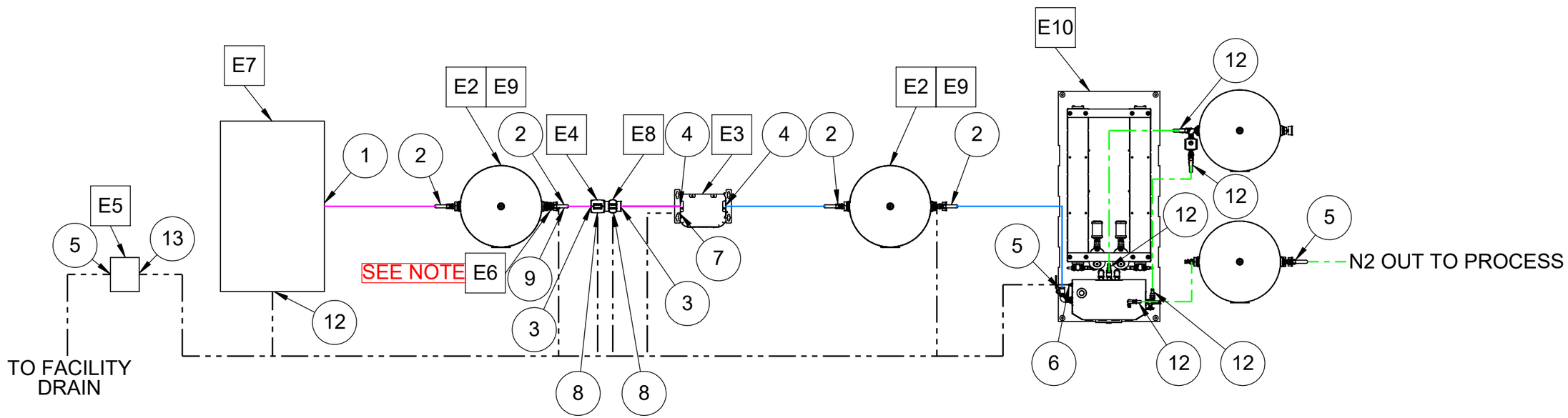

NOTE:
IF DRAIN TO ITEM E6 IS NOT CONSTANT DOWNHILL SLOPE,
VENT LINE MUST BE INSTALLED ON 1/4" PTC FITTING ON TANK.

REV.	ECO#	DESCRIPTION	DATE	REV'D BY	APPD. BY
-	-		-	-	-
02	-	UPDATED GENERATOR TO HAVE 2ND TANK INCLUDED WITH BARB CONNECTION CALLED OUT	06/08/26	BS	DD
01	-	NEW N2 TANK FITTINGS PACKAGE FOR 10-14 UNITS	08/05/25	BS	MFG

REVISIONS: ONLY THE LAST 3 REVISIONS WILL BE SHOWN. OLDER REVISIONS CONSOLIDATED AND FILED

MISSION CRITICAL South-Tek Systems

PROPRIETARY AND CONFIDENTIAL
THE INFORMATION CONTAINED IN THIS DRAWING IS THE SOLE PROPERTY OF SOUTH-TEK SYSTEMS. ANY REPRODUCTION IN PART OR AS A WHOLE WITHOUT THE WRITTEN PERMISSION OF SOUTH-TEK SYSTEMS IS PROHIBITED.

MATERIAL:
FINISH:
WEIGHT: -
PROJECT NAME: CUSTOMER DRAWINGS

N2GEN-FLEX PACKAGE GENERAL ARRANGEMENT

DRAWN: MFG | APPROVED: SRG
DATE: 02/05/24 | DATE: 06/11/26
FM APPROVAL APPLIES: NO | SIZE: B | SCALE: 1:32 | SHEET: 6 OF 8

UNLESS OTHERWISE SPECIFIED DIMENSIONS ARE IN INCHES

ANGLES	X.	.X	.XX	.XXX	X/X<10'	X/X>10'
±.5°	±1	±.2	±.03	±.005	±1/16	±1/8

NUMBER: GA-N2GEN-FLEX
REVISION: 02

LINE LEGEND	
	DRY AIR IN
	NITROGEN
	CONDENSATE DRAIN

GA-N2GEN-FLEX, N2GEN-FLEX PACKAGE GENERAL ARRANGEMENT, 01			
ITEM #	NUMBER	DESCRIPTION	QTY.
1	N2GEN-FLEX-8TS	N2GEN-FLEX-8TS UNIT ASSEMBLY	1

DIMENSIONS AND WEIGHTS	
NITROGEN GENERATOR	
DIMENSION	WEIGHT
(30"L X 68"W X 70"H)	(XXXX lbs)
NITROGEN TANK	
(21"OD X 53.5"H)	(165 lbs)

CONNECTIONS	
1	3/4" NPT FEMALE
2	3/4" OD BARB
3	1/4" OD PTC

NITROGEN GENERATOR DESIGN DATA	
AIR FLOW	XXXX SCFM @ XXX PSI
N2 OUT FLOW	XXXX SCFH @ XXX PSI
PURITY	XX.XXX%

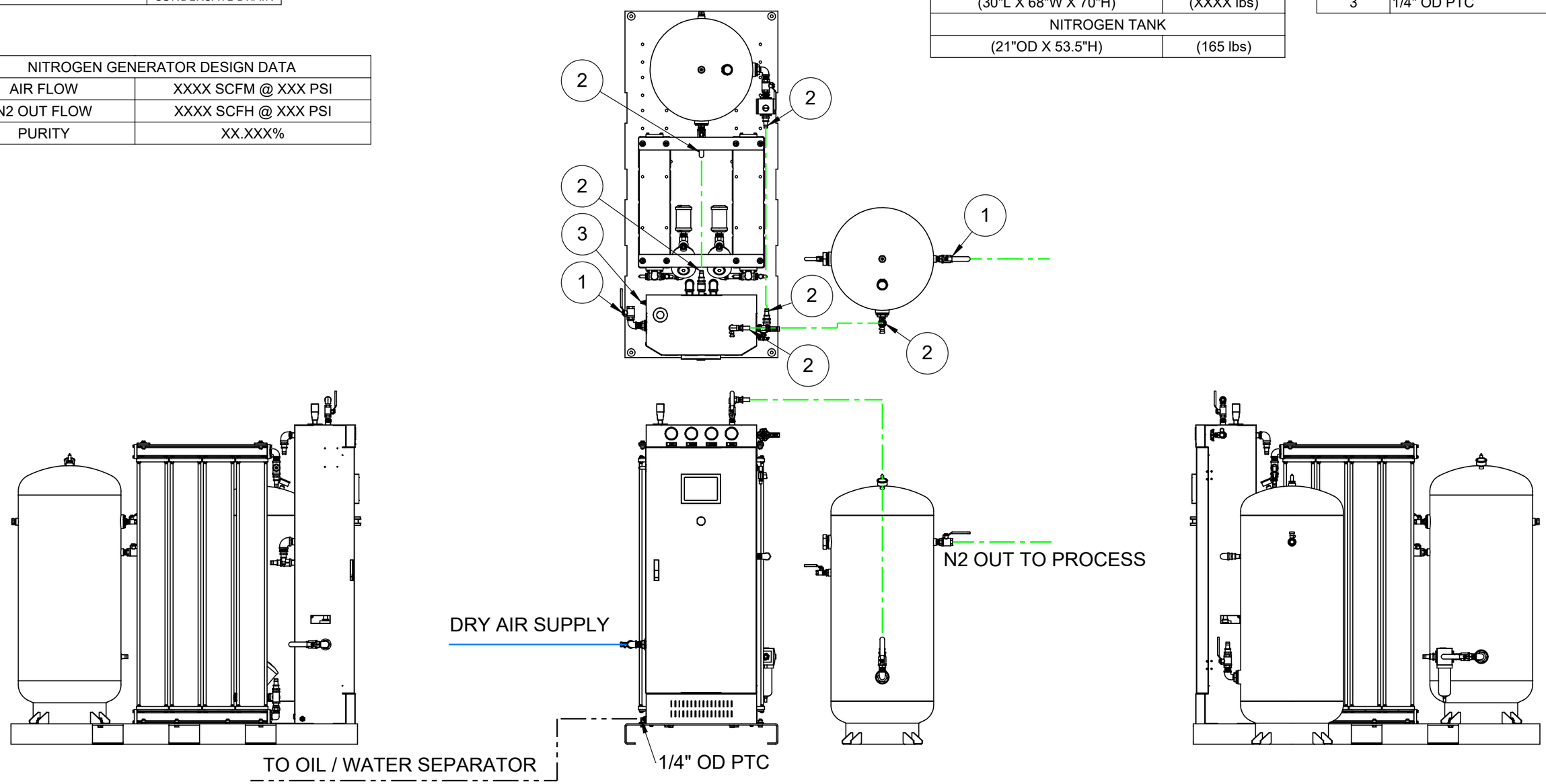

REV.	ECO#	DESCRIPTION	DATE	REV'D BY	APPD. BY
-	-		-	-	-
02	-	UPDATED GENERATOR TO HAVE 2ND TANK INCLUDED WITH BARB CONNECTION CALLED OUT	06/08/26	BS	DD
01	-	NEW N2 TANK FITTINGS PACKAGE FOR 10-14 UNITS	08/05/25	BS	MFG

REVISIONS: ONLY THE LAST 3 REVISIONS WILL BE SHOWN. OLDER REVISIONS CONSOLIDATED AND FILED

MISSION CRITICAL South-Tek Systems

PROPRIETARY AND CONFIDENTIAL
THE INFORMATION CONTAINED IN THIS DRAWING IS THE SOLE PROPERTY OF SOUTH-TEK SYSTEMS. ANY REPRODUCTION IN PART OR AS A WHOLE WITHOUT THE WRITTEN PERMISSION OF SOUTH-TEK SYSTEMS IS PROHIBITED.

MATERIAL:

FINISH:

WEIGHT:

N2GEN-FLEX PACKAGE GENERAL ARRANGEMENT

PROJECT NAME: CUSTOMER DRAWINGS

FM APPROVAL APPLIES: NO

SIZE: B

DRAWN: MFG — DATE: 02/05/24

APPROVED: SRG — DATE: 06/11/26

SCALE: 1:20

SHEET: 7 OF 8

UNLESS OTHERWISE SPECIFIED DIMENSIONS ARE IN INCHES

ANGLES	X.	.X	.XX	.XXX	X/X<10'	X/X>10'
±.5°	±1	±.2	±.03	±.005	±1/16	±1/8

NUMBER: GA-N2GEN-FLEX

REVISION: 01

LINE LEGEND	
	DRY AIR IN
	NITROGEN
	CONDENSATE DRAIN

GA-N2GEN-FLEX, N2GEN-FLEX PACKAGE GENERAL ARRANGEMENT, 01			
ITEM #	NUMBER	DESCRIPTION	QTY.
E2	N2GEN-FLEX-14S	N2GEN-FLEX-14S UNIT ASSEMBLY	1

DIMENSIONS AND WEIGHTS	
DIMENSION	WEIGHT
NITROGEN GENERATOR	
(30"L X 68"W X 70"H)	(XXXX lbs)
NITROGEN TANK	
(24" OD X 77.5"H)	(77.5 lbs)

CONNECTIONS	
1	3/4" NPT FEMALE
2	3/4" OD BARB
3	1/4" OD PTC

NITROGEN GENERATOR DESIGN DATA	
AIR FLOW	XXXX SCFM @ XXX PSI
N2 OUT FLOW	XXXX SCFH @ XXX PSI
PURITY	XX.XXX%

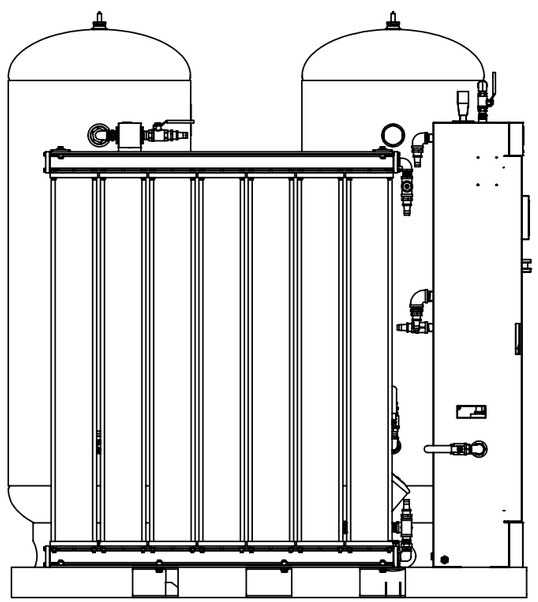

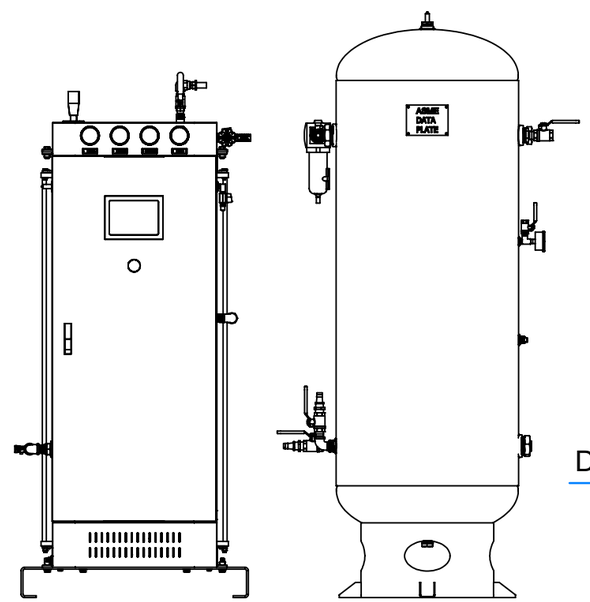

TOP VIEW

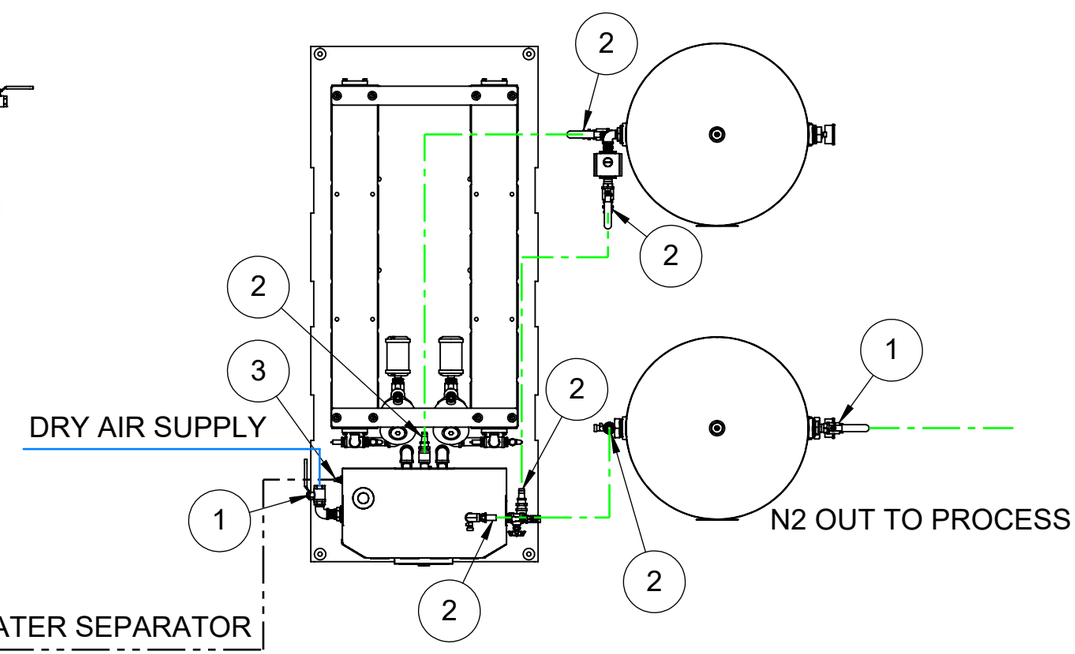

REV.	ECO#	DESCRIPTION	DATE	REV'D BY	APPD. BY
-	-		-	-	-
02	-	UPDATED GENERATOR TO HAVE 2ND TANK INCLUDED WITH BARB CONNECTION CALLED OUT	06/08/26	BS	DD
01	-	NEW N2 TANK FITTINGS PACKAGE FOR 10-14 UNITS	08/05/25	BS	MFG

REVISIONS: ONLY THE LAST 3 REVISIONS WILL BE SHOWN. OLDER REVISIONS CONSOLIDATED AND FILED

MISSION CRITICAL South-Tek Systems

PROPRIETARY AND CONFIDENTIAL
THE INFORMATION CONTAINED IN THIS DRAWING IS THE SOLE PROPERTY OF SOUTH-TEK SYSTEMS. ANY REPRODUCTION IN PART OR AS A WHOLE WITHOUT THE WRITTEN PERMISSION OF SOUTH-TEK SYSTEMS IS PROHIBITED.

MATERIAL:

FINISH:

WEIGHT: -

PROJECT NAME: CUSTOMER DRAWINGS

UNLESS OTHERWISE SPECIFIED DIMENSIONS ARE IN INCHES

ANGLES	X.	.X	.XX	.XXX	X/X<10'	X/X>10'
±.5°	±1	±.2	±.03	±.005	±1/16	±1/8

N2GEN-FLEX PACKAGE GENERAL ARRANGEMENT

NUMBER: GA-N2GEN-FLEX

DRAWN:	APPROVED:
MFG	SRG
DATE: 02/05/24	DATE: 06/11/26

FM APPROVAL APPLIES:	SIZE:	SCALE:	SHEET:
NO	B	1:20	8 OF 8

REVISION: 01